GeoInformation in Europe, M.A. Gomarsca (ed.)

OCEANSAT-2: a mission for oceanography

Vittorio de Cosmo, Valeria Catalano, Maria Daniela Graziano
ASI, Italian Space Agency, Viale Liegi 26, 00198 Roma, Italy

Luigi Dini, Luciano Garramone, Rosa Loizzo, Cosimo Marzo, Marco Serra, Francesco Vespe
ASI, Italian Space Agency, Space Geodesy Center "G. Colombo", 75100 Matera, Italy

K. Thyagarajan & M. Venkata Rao
ISRO, Indian Space Research Organization, Satellite Centre, Airport Road,Vimanapura, Bangalore 560 017, India

Keywords: OCEANSAT-2, Radio Occultation, Ocean Color, Scatterometer

ABSTRACT: OCEANSAT-2 mission is being carried out mostly for providing continuity of operational services of IRS-P4 (OCEANSAT-I), but also because application scientists need measurement of several physical parameters like atmospheric vertical profiles of temperature, pressure and humidity, wind fields over ocean surface, sea state forecasting and bio-physical parameters.

OCEANSAT-2 will be equipped with three payload: OCM, Scatterometer and ROSA. OCM was also present on OCEANSAT-I, Scatterometer and ROSA are new instruments.

The OCEANSAT-2 data will be downloaded at the ISRO Ground Segment, located in Hyderabad, and at the ASI Multimission National Centre (CNM), located in Matera.

The ASI CNM is being developed to manage the ASI Earth Observation data assets, that is data acquired by heterogeneous sensors and arising from various missions.

Through the Multimission National Center, OCEANSAT-2 Data will be analyzed, processed and archived. Using specific processors for data received from OCM-2, Scatterometer and ROSA sensors, many products from Level 0 to 3 will be available.

The Italian Space Agency (ASI) and Indian Space Research Organisation (ISRO) will give the opportunity to conduct scientific research and application development in Earth Observation using products from the OCEANSAT-2 sensors (OCM, Scatterometer and ROSA).

Announcement of Opportunities will be published by ASI and ISRO regarding these themes.

1 INTRODUCTION

OCEANSAT-2 mission is an evolution of the OCEANSAT-1 mission so that it will give same services while adding new ones.

IRS-P4 (OCEANSAT-I), launched in 1999, was a dedicated satellite for Ocean applications and carried two Payloads: Ocean Color Monitor (OCM) and Multi-frequency

Scanning Microwave Radiometer (MSMR). Out of these two, OCM is still providing valuable data which are used for various applications both within India and by International users.

The most significant application areas are identification of Potential Fishery Zones (PFZ) using OCM data and prediction of 'Monsoon' arrival using MSMR data. Experience from OCM data consisted into algorithms developed for atmospheric correction of the data and retrieval of parameters like Chlorophyll concentration, total suspended matter (TSM), estimation of primary productivity, detection of algal blooms.

OCEANSAT-2 mission, being the follow-on of IRS-P4 (OCEANSAT-I), will provide same operational services generated using the OCM data. Moreover, OCEANSAT-2 will also enhance the new applications like atmospheric vertical profiles of temperature, pressure and humidity, wind fields over ocean surface, sea state, Ocean dynamics, and bio-physical parameters.

OCEANSAT-2 will be equipped with three payloads (see Figure 1): OCM, Scatterometer and ROSA. OCM was also present on OCEANSAT-I, but with two modified spectral bands; Scatterometer and ROSA are new instruments. Orbital parameters of OCEANSAT-2 are shown in Table 1

The OCEANSAT-2 data will be downloaded at the ISRO Ground Segment, located in Hyderabad, and at the ASI Centro Nazionale Multimissione, located in Matera.

OCEANSAT-2, that is planned to be launched Spring 2008, will be the first mission that will embark ROSA.

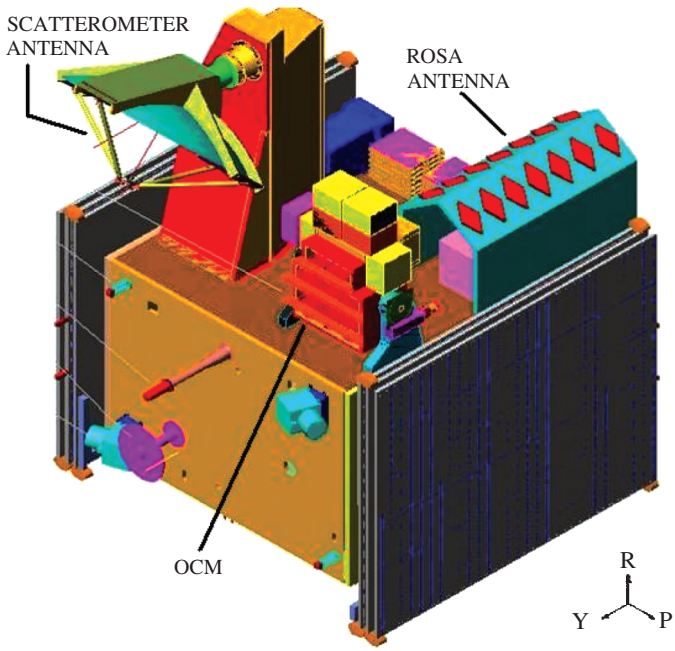

Figure 1.

Table 1. OCEANSAT-2 Orbital parameters.

Type of Orbit	Near polar sun-synchronous
Altitude	720 km
Inclination	98.28 degrees
Period	99.31 minutes
Local time pass	12 a.m. ± 10 minutes

2 OCEANSAT-2 PAYLOADS

2.1 *OCM-II*

OCM is a sold-state radiometer providing observations in eight spectral bands in the VNIR region from 402 to 885 nm. A detailed view of OCM spectral bands is given in Table 2.

Band 6 and 7 are shifted with respect to OCEANSAT-I for the following reasons. Band-6 is shifted from 660–680 nm to 610–630 nm for increasing the percentage reflection of solar radiation from suspended sediments. Band-7 is shifted from 745–785 nm to 720–760 nm, since chlorophyll concentration estimation accuracy is expected to improve when going farther from strong oxygen absorption bands in the range 759–770 nm.

The instrument employs pushbroom scanning technology with linear CCD detector arrays (1916K CCD) of 6000 elements (3700 active detectors, the rest are used to correct for dark current). A swath of 1440 km is provided. An along-track instrument tilt capability of $\pm 20^\circ$ is provided to avoid sun glint. OCM optics is based on one lens per band (wide angle telecentric lens design, refractive system). A scheme of using unused CCD pixels is being utilized as a reference for calibration. The ground resolution is 236 m in the along-track and 360 m in the cross-track direction. Applications are:

- Measurement of concentrations of phytoplankton pigments, suspended sediments, Gelbstoff concentration in the euphotic layer. Assessment of their distribution, both spatially and temporally; detection of algal blooms and their dynamic behavior.
- Identification of potential fishery zones
- Delineation of coastal currents and eddies

Table 2. OCM wavelength range for the eight spectral bands in OCEANSAT-I and OCEANSAT-2.

Spectral band wavelength range (nm)	B1	B2	B3	B4	B5	B6	B7	B8
OCEANSAT-2	*402*	*433*	*480*	*500*	*545*	*610*	*725*	*845*
	422	*453*	*500*	*520*	*565*	*630*	*755*	*880*
OCEANSAT-I	402	432	479	502	547	660	748	847
	422	452	499	522	567	680	788	887

- Estimation of optical properties and phytoplankton abundance for marine resource and habitat assessment
- Observation of pollution and sediment inputs to the coastal zone and their impact on marine food
- Sediment dynamics, dynamics of estuarine/tidal inlets, prediction of shoreline changes, coastal circulation and dispersion patterns.

2.2 *Scatterometer*

Scatterometer operates in Ku-band (13.515 GHz) and is useful for measuring Sea surface wind velocity (both magnitude and direction). The Scatterometer is basically a Radar with two beams and measures the back scatter co-efficient (σo) in four azimuth angles from which the wind velocity is derived. A parabolic reflector is conically scanned. The usable swath coverage is 1400 km. The inner beam operates in HH polarisation while the outer beam in VV polarisation.

Pencil beam scatterometer has the following advantages: Higher SNR improves the measurement accuracy at low wind speeds. Dual beam allows addition of Horizontal polarisation which can be usefully exploited; wind directional accuracy is improved because of four azimuth angles of viewing the same ground foot print (with single antenna instead of multiple antennas); conical scanning covers a wide swath and there are no Nadir gaps; the empirical model function gets simplified as there are only two incidence angles; less complex on-board signal processing thereby reducing data rate.

Applications are measurement of several Physical parameters like wind fields over ocean surface, prediction of cyclone storms, ship routing by Sea state forecasting and others.

2.3 *ROSA instrument*

ROSA (Radio Occultation Sounder of Atmosphere), a space instrument supplied by the Italian Space Agency (ASI), uses the Radio Occultation Technique to provide highly accurate measurements of the atmospheric refractive indexes from which it is possible to derive, atmospheric vertical profiles of temperature, pressure and humidity, as well as profiles of electron content in the ionosphere.

From the space, ROSA, flying on a LEO orbit, is able to perform about 250–300 atmospheric profiles per day on a global scale. ROSA will be able to provide value added products in the fields of Climatology, Operative Meteorology, Space Weather, Space Geodesy and others.

3 OCEANSAT-2 GROUND SEGMENT

The OCEANSAT-2 data will be downloaded at the ISRO Ground Segment, located in Hyderabad, and at the ASI Multi-mission National Center (CNM), located in Matera. Figure 2 shows the architecture of the CNM acquisition chain.

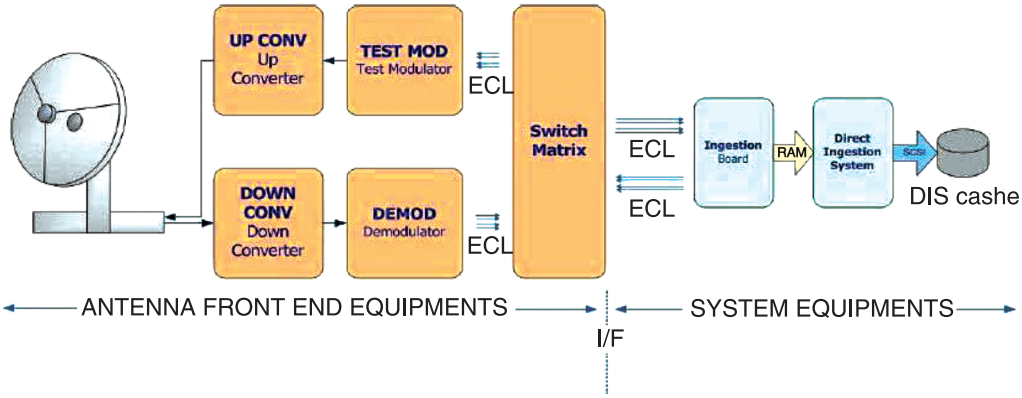

Figure 2.

The signal acquired from the antenna is down-converted, then demodulated. The resulting ECL signal is distributed to the Direct Ingestion System through a Switch Matrix. The Ingestion Board ingests the ECL signal into the DIS computer (a COTS, Intel based, Linux PC, multi CPU), via DMA mechanism.

It is important to notice the following facts:

- Everything after signal demodulation (e.g. synchronisation, framing) is done in software on the DIS server;
- The DIS server is Multi-mission. Thus, receiving a new mission is only matter of adding a new DIS program on this server. Therefore, this allow to meet, among the other, more stringent requirements in terms of physical space inside the centre, power consumption, besides lower costs and integration times/efforts and platform flexibility.

The ASI CNM is being developed to manage the ASI Earth Observation data assets, that is data acquired by heterogeneous sensors and arising from various missions.

Its main functions will be:

- Acquire
- Store, catalogue and archive
- Process
- Distribute data and services
- Manage users and interface them
- Handling data, metadata and related documentation
- Interfacing both commercial and non-commercial users.

The ASI main objective is to develop a multifunctional national data center able to support heterogeneous missions, but also contribute to the last ASI Radar Earth Observation mission ground segment future developments.

4 OCEANSAT-2 DATA ANALYISIS AND ARCHIVE CENTER

Through the Multi-mission National Center, OCEANSAT-2 data will be analyzed, processed and archived. Using specific processors for data received from OCM-2, Scatterometer and ROSA sensors, many products from Level 0 to 3 will be available. A summarized list of them is presented below:

4.1 *OCM*

OCM will provide the following products: Standard Products, Radiance products, special products like chlorophyll concentration, yellow substance, atmospheric correction, etc.

4.2 *Scatterometer*

Scatterometer will provide the following products:

- Level-2A: Grouping of σo measurements at Wind Vector Cell (WVC).
- Level-2B: Retrieval of Wind for each WVC using the Geophysical Model Function.
- Level-3: Grouping of WVC cells on a global grid.

4.3 *ROSA*

ROSA will provide the following products:

- Level 0: a) Radio Occultation raw data extracted from the OCEANSAT-2 data flow telemetry (before any data organization in well defined files); b) data as they are produced by the GPS Ground Fiducial Network or IGS.
- Level 1A: the same data from Level 0 systematically organized in files for further developments.
- Level 1B: data (GPS/LEO Orbit Determination and Prediction) for Standard Operations are: a) estimated Precise and Ultra Rapid GPS Satellites Orbits obtained from IGS; b) estimated Precise and Rapid OCEANSAT-2 Satellite Orbits computed using dynamical methods. For Improved Standard Operations are: a) Estimated and predicted Precise and Rapid GPS Satellites Orbits computed using dynamical methods; b) Estimated and predicted Precise and Rapid OCEANSAT-2 Satellite Orbits computed using reduced-dynamical or kinematical methods.
- Level 2: a) observed L1 and L2 Excess phases (at 50 Hz for *closed loop* data and 100 Hz for *open loop* data) for each occultation event; b) table of observed Radio Occultation events, table of predicted Radio Occultation events (computed using predicted orbital data); c) L1 and L2 SNRs or signal intensities (at 50 Hz for *closed loop* data and 100 Hz for *open loop* data) for each occultation event; d) predicted Doppler model using meteorological predictions and predicted orbital data for each occultation event.
- Level 3: a) L1 and L2 Bendings vs. Impact Parameters profiles; b) Ion-free Bendings vs. Impact Parameters profile; c) Stratospheric initialization of Ion-free Bendings vs. Impact Parameters profile; d) Dry air vertical atmospheric parameters; e) Water Vapor and vertical atmospheric parameters; f) Electron Density vertical profile.

5 CONCLUSIONS

The Italian Space Agency (ASI) and Indian Space Research Organisation (ISRO) will give the opportunity to conduct scientific research and application development in Earth Observation using products from the OCEANSAT-2 sensors (OCM, Scatterometer and ROSA).

The opportunity is open "worldwide" for candidates submitting proposals which cover exploitation of OCM, Scatterometer and ROSA products for:

- Scientific Research and Application Development;
- OCM, Scatterometer and ROSA products algorithm development and validation;

Announcement of Opportunities will be published by ASI and ISRO regarding these themes.

REFERENCES

De Cosmo, Catalano, Garramone, Loizzo, Marzo, Thyagarajan, Venkatarao, & Vespe, 2006. ROSA on OCEANSAT-2. *Proceedings of SPIE* Vol 6408, Remote Sensing of the Atmosphere and Clouds, Goa, India, 13th November, 2006.

Desai, Honne Gowda, & Kasturirangan, 2000. Ocean research in India: Perspective from space, *Current Science* 78 (3) 268–278.

Sethia, N. M., Desai, B. S., Kumar, J. G., Vachhani, V. R. & Gujraty, 2005. Signal Processor For Scatterometer Radar Onboard OCEANSAT-2 Satellite. *Proceedings of IRSI 2005* (International Radar Symposium India 2005), Bangalore, India, 20–22.