GeoInformation in Europe, M.A. Gomarsca (ed.)
©2007 Millpress, Netherlands, ISBN 9789059660618

Automated delineation of debris-covered glaciers based on ASTER data

Tobias Bolch, Manfred F. Buchroithner, Andre Kunert
Institute for Cartography, Technische Universität Dresden, D-01062 Dresden, Germany, tobias.bolch@tu-dresden.de, manfred.buchroithner@tu-dresden.de

Ulrich Kamp
Department of Geography, The University of Montana, Missoula, MT 59808, USA, ulrich.kamp@mso.umt.edu

Keywords: debris-covered glaciers, glacier mapping, morphometric analysis, ASTER DEM, Corona, Khumbu Himalaya

ABSTRACT: Large areas of the glacier tongues at Mt. Everest are heavily covered by supraglacial debris. This hampers the automated mapping of the actual ice snout by means of spaceborne imagery due to the similar spectral signal of the surrounding debris. The most significant features which differentiate the glaciers are the typical surface characteristics like a rough surface or "cryokarst" and a number of ablation ponds. At a first glance the outline of these debris-covered glaciers seems to be stable. Looking in detail at these glaciers using multitemporal space imagery it is obvious that recent glacier shrinkage results in an increasing debris coverage and an increasing number and, hence, area of supra-glacial lakes. In addition, the surface, especially at the very distal part of the glacier, looks smoother and shows no significant indications for movement.

Hence, presently ASTER stereo-images represent an ideal tool to develop an automated way of outlining the ice extents of the active and inactive glacier. Combining ASTER's thermal information with various shape parameters derived from stereo-models, both the actual glacier beds and the marginal moraines could be outlined. Mainly due to the resolution of the ASTER DEM (30 m) this concept is only promising for large glaciers such as the Khumbu Glacier. In future, when high resolution DEMs will be available, the accuracy will be sufficient for a fully automated glacier monitoring, including smaller glaciers.

1 INTRODUCTION

Glaciers are key indicators to assess climate change in remote mountain areas where climatic stations are very rare or not existing. Most of the Himalayan glaciers are shrinking like in many other parts of the world (Kadota *et al*. 2000, Ren *et al*. 2006, WWF 2005). Recent glacier recession results in an increasing coverage of the ice with debris (Figure 1). The debris, again, complicates the mapping by means of spaceborne imagery due to the spectral similarity to the surrounding rock material. On the other hand, satellite imagery basically represents an ideal tool to develop an automated way of outlining

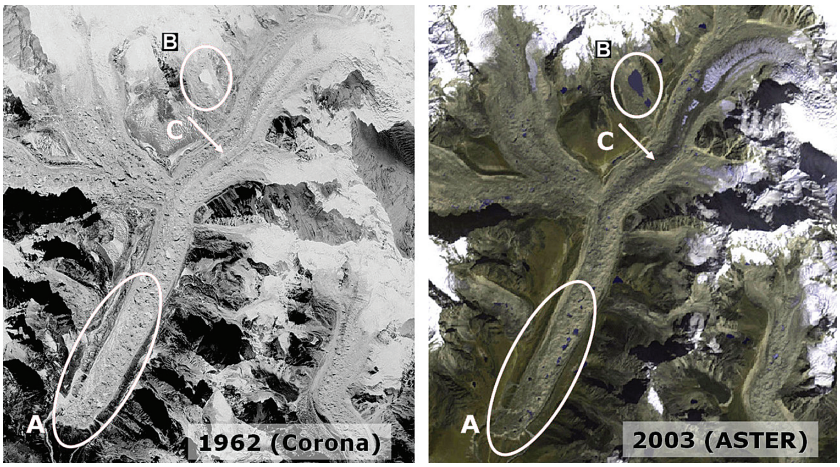

Figure 1. Khumbu Glacier. Left: Corona image from 1962. Right: ASTER Image from 2003 (3-3-1); A: Terminus with area of stagnant ice and increasing number and total area of several ponds, B: Increasing area of a preglacial lake, C: Decrease of clean-ice area accompanied by an increasing debris cover.

the glacier-ice extension in remote mountain areas. The yet presented methods show the potential for an automated mapping but are mostly developed for a special glacier type and still include several problems and inaccuracies. This is especially true, if applied to the debris-covered glaciers at the study area at the Nepalese side of Mt. Everest (see Section 3). Hence, the morphometry-based glacier mapping method (MGM) has to be further developed. This paper presents a promising novel approach using morphometric features derived from an ASTER DEM and thermal information.

The study area of Khumbu Himal is situated south of the main ridge of the Himalaya around Mt. Everest. Like in many other parts of the Himalaya the tongues of many large glaciers are covered by a thick layer of debris (Moribyashi & Higuchi 1977). The thickness of the debris-cover can reach up to several meters (Watanabe *et al.* 1986). About one third of the glaciers in the Khumbu Himal are debris-covered (Fujii & Higuchi 1977). These debris-covered tongues are characterised by a rough surface, sharp local declines of up to 20 m, the occurrence of "cryokarst" formations and supraglacial ponds, and a gentle overall slope of the whole debris-covered tongue. In addition, all investigated tongues contain parts of stagnant ice at the front, which are most probably connected with the active glacier-ice, but differ in their surface characteristics. These parts are smoother, and locally even sparse grass vegetation is able to grow. These features are well described for the Khumbu Glacier (Iwata *et al.* 1980, Watanabe *et al.* 1986). The parts of stagnant ice are commonly included into the glaciers, e.g. also for the Nepalese Glacier Inventory (Mool *et al.* 2001). Looking at multitemporal space imagery, such as Corona (1962) and ASTER (2003) (Figure 2), it seems at a first glance that these glaciers are mostly stable. However, looking in more detail it becomes obvious that recent glacier shrinkage results in an increasing debris coverage and in an increasing number and total area of supra-

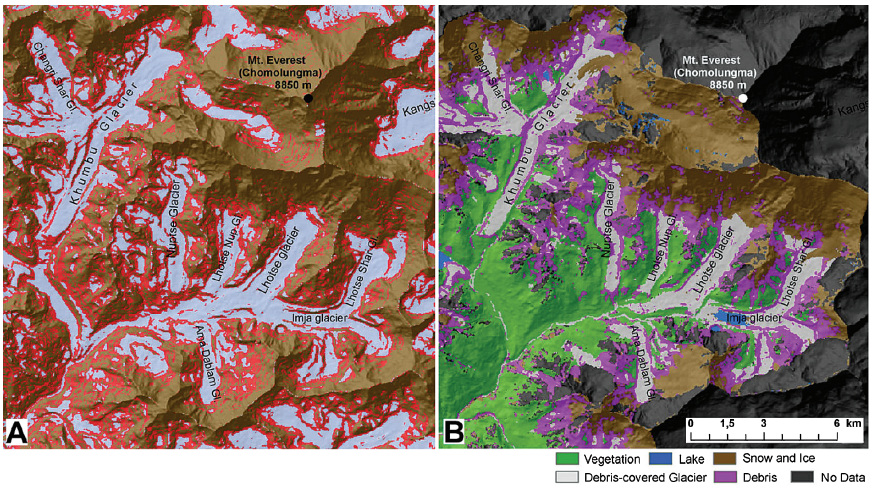

Figure 2. Comparison of different delineation methods: A: Cluster of slope and curvature (modified after Bishop *et al.* 2001), B: Combination of supervised classification (PC 1-3) and the slope (<12°).

glacial lakes. In addition, the surface, especially at the very distal part of the glacier, looks smoother and shows no significant indices for movement. The glacier change of these debris-covered glaciers is mainly recognisable through downwasting (Kadota *et al.* 2000). It has to be mentioned that a clear delineation of the glacier termini is not possible, even with ultra-high resolution images (e.g. Quickbird, IKONOS) or in the field.

2 ASSESSMENT OF DELINEATION METHODS USING SPACE MAGERY

One promising method to distinguish between a debris-covered glacier and surrounding bedrock might be analysing surface temperatures, because the underlying ice is supposed to cool the supraglacial debris. This is measurable on the surface with the thermal signature from ASTER and Landsat imagery, provided the debris cover does not exceed a certain density and/or thickness. Ranzi *et al.* (2004) proved the capability of the thermal band to identify the glacier if the debris cover does not exceed 0.5 m. However, the exclusive use of thermal information causes problems for glaciers with massive debris cover. In addition, shaded non-glacier areas have surface temperatures similar to the clean-ice areas, but debris-covered ice with direct radiation turns out to be somewhat warmer. This hampers especially in shaded moraine complexes a clear differentiation of glacier and non-glacier area. An additional draw-back is of course the relatively low resolution of the thermal bands.

Bishop *et al.* (2001) presented a two-fold hierarchical model including elevation, slope, aspect and curvature for debris-covered glaciers at Nanga Parbat (Pakistan). For the Everest area a similar model was tested. The results proved to be better without using the aspect (Figure 2A). Basically, this model has the capability for glacier delineation, but

still contains several inaccuracies. The main problems occur at the glacier termini and the glacier edges, if the transition to non-glaciated terrain is smooth, e.g. if the lateral moraine is missing or not represented in the DEM.

Paul *et al.* (2004) followed a semi-automated approach to map a debris-covered glacier in the Swiss Alps from a TM4/TM5 ratio image, and using the slope gradient. Further improvements of the glacier map were then reached by integrating a vegetation classification using multispectral data, neighborhood analyses and change detection. This approach fails, when transferred to the Himalayan debris-covered glaciers in its original form. If however, the gradient threshold in the ASTER DEM is shifted to around 12°, many parts of the debris-covered tongues can be included. Multitemporal data to delineate the termini are of no use due to the stable position of the glacier termini. Another problem occurs because of vegetation cover on some debris-covered spots. Therefore the NDVI as a threshold has to be used with caution.

Zollinger (2003) used another multidimensional approach for debris-covered glaciers in Khumbu Himal. It includes multispectral classification, slope (threshold 25°) and filters. This approach shows promising results when the slope threshold is changed to 12°. Misclassifications occur however, especially where bare rock-surfaces appear due the melting of the smaller debris-free glaciers since the end of the Little Ice Age (Figure 2B).

Bolch & Kamp (2006) presented a simple method for alpine valley glaciers using clustering of curvature features. This morphometric mapping method is very useful to describe the surface characteristics. However, due to the different characteristics of the "Himalayan Type" of debris-covered glaciers a distinct delineation is also not possible.

3 ADVANCED MAPPING METHOD

The base for the morphometic analysis should be a low cost DEM with medium to high resolution and for monitoring purposes the DEM should be based on multitemporal data. ASTER DEMs fulfil these requirements and are, despite some possible inaccuracies in this extreme relief, useful for geomorphological and glacier mapping (Bolch *et al.* 2005, Kääb *et al.* 2003, Kamp *et al.* 2005). The ASTER DEM for the present study is based on stereo-scenes of the years 2001, 2002, and 2003. After postprocessing the overall quality of this DEM is promising, and especially the characteristics of the glaciers tongues and their surroundings are well represented (Buchroithner & Bolch 2007).

Visual interpretation of the ASTER thermal bands confirms that, despite the above mentioned problems, large areas of the debris-covered glacier portions are identifiable (Figure 3C). This means that thermal information can to some extend be used as additional information. When analysing the morphometric parameters in more detail one finds that the slope gradient (Figure 3A) and the curvature features (Figure 3B) are optimum to describe the surface characteristics and the transition to the surrounding moraines, mountain slopes and glacier forefields. The aspect, however, does not show a significant correlation to the glacier areas. The average slope gradient in the areas of interest is less than 6°, and except for very small areas with higher rates (which reflect the

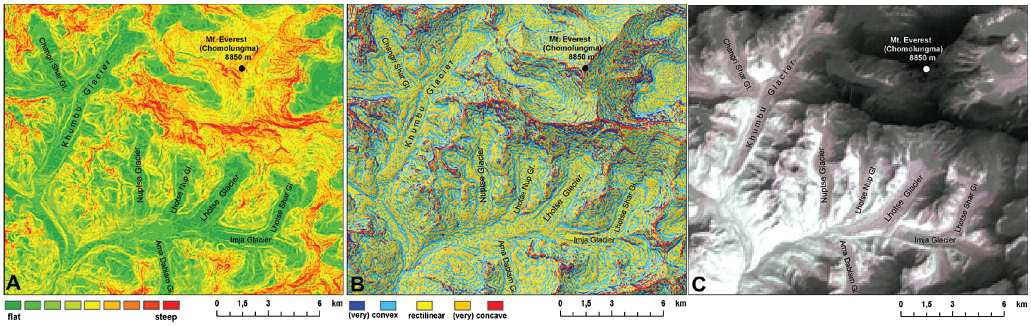

Figure 3. From left to right: slope gradient, curvature, ASTER thermal bands 13-12-11.

typical rough surface), it does not exceed 10° in the ASTER DEM. The curvature well indicates the mountain ridges and the lateral moraines.

A combination of the morphometric features and the thermal band seems to be promising for the delineation of the debris-covered glaciers. For the presented approach, first a number of training areas were defined. These are distributed over several glaciers and represent the typical surface characteristics. Then, based on theses areas, statistical parameters like mean, minimum, maximum and standard deviation were computed for each parameter separately, and the characteristic intervals were calculated where the debris-covered glaciers occur. Finally, the determined areas for the selected parameters were intersected (Figure 4). In a postprocessing step isolated areas smaller then 0.1 km^2 and areas which are not connected with clean ice were eliminated. The clean ice and snow areas were detected using a ratio image of the near infrared and the short-wave infrared, e.g. ASTER Band 3 and 4 (Bolch & Kamp 2006, Bolch & Kamp 2006, Kääb *et al.* 2003). At last, small gaps within the final areas were filled. The method was realized using ERDASImagine 9.0 and AML.

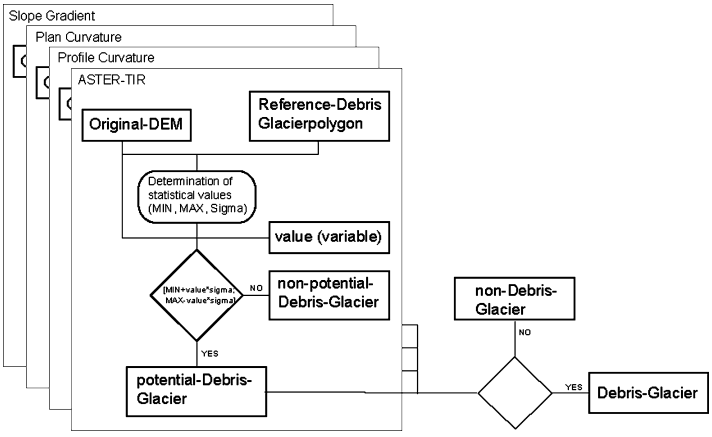

Figure 4. Scheme for the morphometric glacier mapping (MGM) in Khumbu Himal.

4 RESULTS AND DISCUSSION

The final result of the morphometry-based glacier mapping well represents the outline of the debris-covered glaciers (Figure 5). The discrepancy between the calculated and the manually digitized polygons amounts to about 5%. The main problems occur at the distal and on some lateral parts of the debris-covered glaciers, where no clear indicators exist, and on recently deglaciated glacier forefields. This is especially true for areas where the debris-cover is several meters thick and stagnant ice exists. Here the transition to the forefield or to the adjacent non-glacier area is gradual. The small secondary moraines which delimit the active glacier on both sides are too small to be represented in the ASTER DEMs. However, where distinct lateral moraines exist, the developed method allowed to clearly delineate the glacier. Hence, the developed method very well demonstrates the capability of the morphometry–and temperature-based glacier delineation, and the generated ASTER DEM turned out to be of reasonable use. Due to the medium resolution of the DEM, however, the typical glacier surface characteristics are not adequately reflected, and this limits the accuracy.

One major problem for the intended glacier monitoring is that the presented method does not really distinguish between the active glacier and the stagnant ice area. Visual interpretation of the optical ASTER data allows distinguishing these two zones with some inaccuracies. The resolution of the DEM is too coarse to reflect the different crucial surface characteristics clearly. Hence, additional information has to be included and higher-resolution DEMs are needed to describe the very complex topography of the glaciers and their surroundings. Therefore, further work will concentrate on the improvement of the knowledge about the surface characteristics of the debris-covered glaciers and their adjacent moraines. For this, shape parameters of the glaciers, global

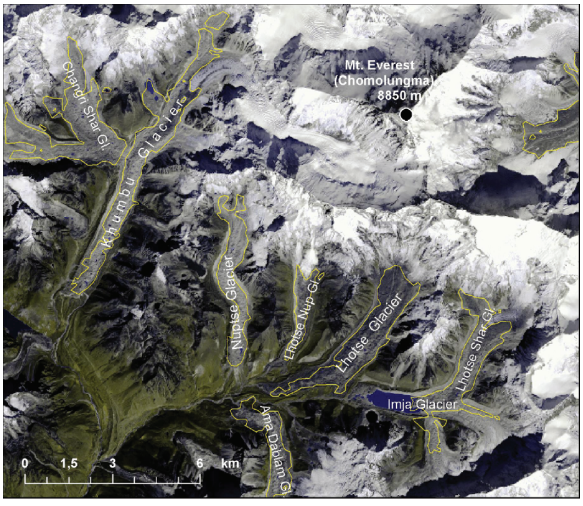

Figure 5. Automatically delineated areas of debris-covered glaciers (yellow polygons) based on ASTER.

decision criteria, and methods of pattern recognition are presently (spring 2007) being developed. First results show the expected further improvements. With the high-resolution multitemporal DEMs available in the near future, e.g. from the TanDEM-X SAR mission, the automated glacier monitoring methods are likely to reach high accuracy. Another approach of the Glacier Research Group of the TU Dresden goes into the direction of automatically measuring the glacier flow using multitemporal ASTER and Ikonos data. This should allow to distinguish between moving and stagnant ice.

5 CONCLUSION

The presented approach to map the debris-covered glaciers at the Nepalese side of Mt. Everest based on ASTER imagery turned out to be promising. The developed method based on morphometric parameters derived from an ASTER DEM and ASTER thermal information permits to delineate the debris-covered glaciers with good accuracy. Problems occur mainly at the distal parts of the glaciers where stagnant ice exists and where it is even in the field difficult to distinguish between glacier and non-glacier. Further improvements are expected when using higher-resolution DEMs and flow velocity measurements.

ACKNOWLEDGEMENTS

The authors like to thank B. Shrestha (ICIMOD, Nepal) for the cooperation. ASTER data were provided at no cost through NASA/USGS under the umbrella of the GLIMS project. The project is funded by the German Research Foundation (DFG) under the code BU 949/15-1.

REFERENCES

Bishop, M.P., Bonk, R., Kamp, U. & Shroder, J.F. 2001. Terrain analysis and data modeling for alpine glacier mapping, *Polar Geography* 25, 182–201.

Bolch, T., Kamp, U. 2006. Glacier mapping in high mountains using DEMs, Landsat and ASTER data, *Grazer Schriften für Geographie und Raumforschung* 41, 37–48.

Bolch, T., Kamp, U. & Olsenholler, J. 2005. Using ASTER and SRTM DEMs for studying geomorphology and glaciation in high mountain areas. M. Oluic (Hg.). *New Strategies for European Remote Sensing*, Millpress, Rotterdam: 119–127.

Buchroithner, M.F., Bolch, T. 2007. An Automated Method to Delineate the Ice Extension of the Debris-Covered Glaciers at Mt. Everest Based on ASTER Imagery. *Proc. 9th int. Sympos. on High Mountain Remote Sensing Cartography*, 14–22 September 2006 held in Graz, Austria, 8 pp. (in press).

Fujii, Y., Higuchi, K. 1977. Statistical Analysis of the Forms of the Glaciers in the Khumbu Himal. *Journal of the Japanese Society of Snow and Ice* 39 (Special Issue), 7–14.

Iwata, S., Watanabe, O., Fushimi, H. 1980. Surface morphology in the ablation area of the Khumbu glacier, *Journal of the Japanese Society of Snow and Ice* 41 (Special Issue), 9–17.

Kääb, A., Huggel, C., Paul, F., Wessels, R., Raup, B., Kieffer, H. & Kargel, J.S. 2003. Glacier monitoring from ASTER imagery. Accuracy and applications. *EARSeL eProceedings 2–Observing our cryosphere from space*, 43–53.

Kadota, T., Seko, K., Aoki, T., Iwata, S. & Yamaguchi, S. 2000. Shrinkage of Khumbu Glacier, east Nepal from 1978 to 1995, *IAHS Publication* 264, 235–243.

Kamp, U., Bolch, T. & Olsenholler, J. 2005. Geomorphometry of Cerro Sillajhuay, Chile/Bolivia: comparison of DEMs derived from ASTER remote sensing data and contour maps, *Geocarto Int.* 20(1) 23–34.

Mool, P. K., Bajracharrya, S.R. & Joshi, S.P. 2001. Inventory of glaciers, glacial lakes, glacial lake outburst floods: Monitoring and early warning systems in the Hindu Kush-Himalayan Region, Nepal. ICIMOD, Kathmandu, Nepal, pp. 386.

Moribyashi, S., Higuchi, H. 1977. Characteristics of glaciers in the Khumbu region and their recent variations, *Journal of the Japanese Society of Snow and Ice* 39 (Special Issue), 3–6.

Paul, F., Huggel, C. & Kääb, A. 2004. Combining satellite multispectral image data and a digital elevation model for mapping of debris-covered glaciers, *Remote Sensing of Environment* 89(4) 510–518.

Ranzi, R., Grossi, G., Iacovelli, L. & Taschner, T. 2004. Use of multispectral ASTER images for mapping debris-covered glaciers within the GLIMS Project. IEEE International Geoscience and Remote Sensing Symposium Vol. II, 1144–1147.

Ren, J., Jing, Z., Pu, J. & Qin, X. 2006. Glacier variations and climate change in the central Himalaya over the past few decades, *Annals of Glaciology* 43, 218–222.

Watanabe, O., Iwata, S. & Fushimi, H. 1986. Topographic characteristics in the ablation area of the Khumbu Glacier, Nepal Himalaya, *Annals of Glaciology* 8, 177–180.

WWF 2005. An Overview of Glaciers, Glacier Retreat, and Subsequent Impacts in Nepal, India and China. *WWF Nepal Program*: pp. 79.

Zollinger, S. 2003. Ableitung von Parametern für die Identifikation und Beobachtung gefährlicher Gletscherseen in Nepal aus ASTER Satellitendaten. Diploma Thesis, Geogr. Inst., Universität Zürich: pp. 172.